Wizards of NOS

Street-Blaster 150-Y Dry Nitrous System

01302 834343 • www.noswizard.com

Table of Contents

List of Components	1
Nitrous Bottle Installation	2
Pipe Fitting Instructions	3
Nitrous Supply Pipe Routing &Pulsoid Installation	4
Venom Injector Installation	5
Metering Jet Location & Size Verification	6
Throttle Switch Fitting Instructions & Wiring Diagram	7
Fitting In Brief & Test Procedure	8

Tools Required

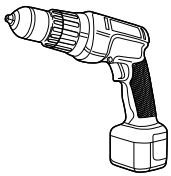

Drill

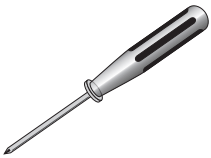

Phillips Screwdriver

Standard Screwdriver

Utility Knife

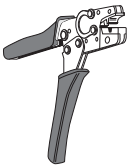

Wire Stripper/Cutter

Spanners

8mm / 4mm nuts
10mm / 5mm nuts
13mm / Jet holder
17mm /inlet nut

❑ 10lb bottle
❑ 5lb bottle

❑ Bottle bracket

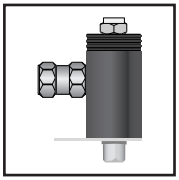

❑ N2O Pulsoid

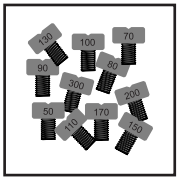

❑ Jets

❑ Venom injector

❑ Micro Switch w/ bracket

❑ Wiring 10ft-5ft
❑ Connectors
❑ Fuse holder
❑ 20 amp fuse

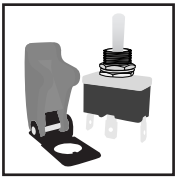

❑ Arming switch w/ flip cover

❑ 4mm (blue) 1m
❑ 5mm (black) 5m

❑ 3 x 4mm nuts/olives
❑ 3 x 5mm nuts/olives

❑ Sticker

Nitrous Cylinder Installation and Mounting

The nitrous cylinder must be mounted exactly as shown (Fig.1). In this position **liquid** nitrous oxide will be delivered, which is essential for the system to work properly. If you can't mount the cylinder exactly as shown, phone for advice. The brackets supplied will provide secure mounting with quick release for ease of refilling.

Position the bottle brackets to ensure that the valve end of the bottle is **higher** than the base end, with the outlet pipe connection pointing towards the floor (no other way). Please contact us if you are unable to mount the cylinder as shown for vehicle specific advice.

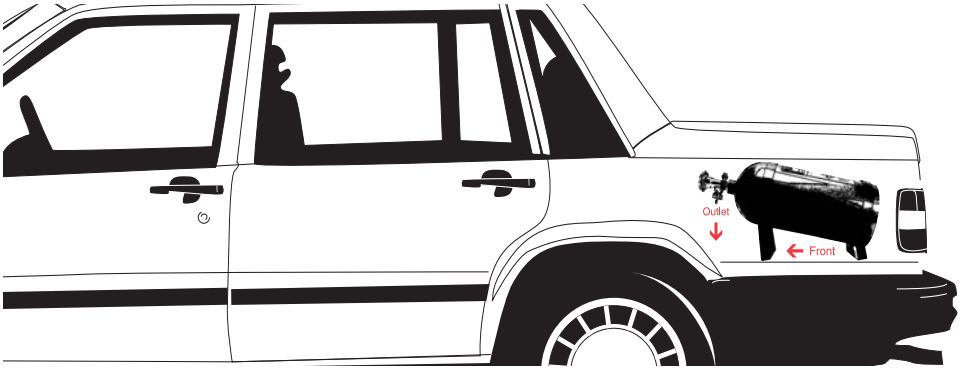

Fig. 1

Your Max Flow bottle valve comes equipped with a SPRV: The "SPRV" replaces the "blow off disc" that is common on other valves. Factory set at 1,000 psi and can be adjusted up to 1,700 psi. Pressure control ensures no lean conditions for set jet ratios and no more burst disc that loses all the bottle contents. The "SPRV" works by opening and bleeding off excess "gaseous" pressure when the set pressure is reached and then closing again. Wasted gaseous nitrous is very minimal. **Please contact if needing adjusting.**

⚠ WARNING

The cylinder valve should not be opened unless the outlet is aimed into open space, or connected to the system. When the valve is opened nitrous is discharged at a high pressure (approximately 800-1,200 psi@ - 129 degrees), at which this temperature can cause a painful freeze burn if it makes contact with the skin.

Supply Pipe Routing

5mm Nylon Line: The vital route of the nylon nitrous supply line for **best** performance is shown in (Fig. 2), where the pipe runs through the inside of the car with the wiring loom and into the skuttle, between the windscreen and engine bay

SS Braided Line: If you have chosen the optional braided line then be sure to route in as cool as possible exterior location. You will most likely have to drill a hole in your boot(trunk), truck bed, or hatchback area floor to pull the line through to underneath the vehicle and run up to the engine bay.
If you are unable for any reason to route the pipe as shown and explained, **please contact us for advice**.

Pulsoid Installation

The Pulsoid must be mounted in the coolest possible location close to the injector **(if possible the pipes between the Pulsoid and the injector should be kept under 12" for optimum performance).** The Pulsoid must also be easily accessible for jet changing, as the metering jet is located in the outlet (Fig.5). If possible **avoid** mounting the Pulsoid at the back of the engine, on the firewall (bulk head), or rear inner wings as these are usually the hottest parts of the engine bay, which increases the vaporisation process of the liquid nitrous to gas. Examples of suitable Pulsoid locations in the order of preference are;
1) Skuttle (between windscreen and engine bay), **2)** Front inner wing, See Fig. 2.

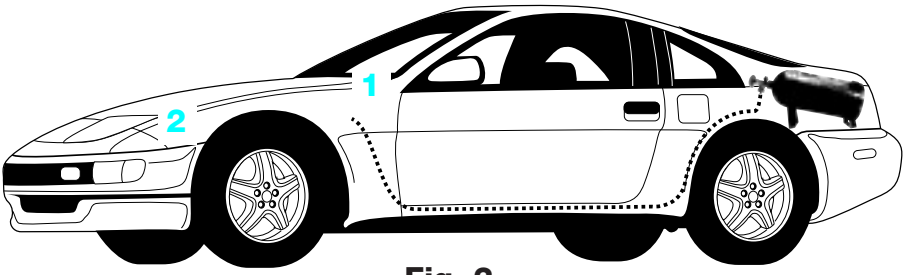

Fig. 2

⚠ WARNING

Always run the supply pipe in the coolest possible areas, as heating causes the liquid nitrous to turn to gas, which causes overfueling due to inadequate nitrous flow resulting in poor performance.

Nylon & Braided Pipe Fittings

Run the enclosed 5mm black nylon pipe from the nitrous bottle to the nitrous (blue) Pulsoid inlet. Cut the pipe to length using a sharp utility knife or nylon pipe cutter. **Do not** use wire snips, pliers, etc. as these will squash and deform the pipe end making it almost impossible to fit the nut and olive. Slide the nut and olive onto the pipe ends as shown below (Fig. 3). Insert the pipe ends into the fittings (bottle, Pulsoid, etc.). Tighten the nuts adequately to retain & seal the pipe but not excessively as this will crush (neck) the pipe and restrict the flow. Make sure to push the nylon pipe securely in to the fittings, so it doesn't slide back out while tightening the nuts.

To check that the pipe is totally sealed, briefly turn on the nitrous bottle valve and inspect for leaks with soapy water at the connections. If a leak is detected, tighten up the nut (whilst avoiding contact with any escaping gas particles), until the leak is stopped. When you are satisfied that the system is leak proof, release the pressure in the system by using an optional purge if installed or loosening the fitting at the bottle nut.

IMPORTANT: When tightening the fittings to secure pipes, we strongly advise the use of the correct size spanners otherwise damage may occur and the fittings may fail to do their job.

Nylon Pipe Fittings

Fig. 3

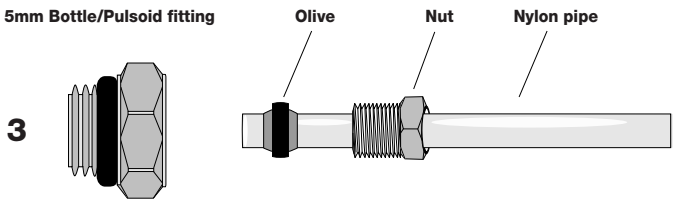

Braided Hose Fittings

Fig. 4

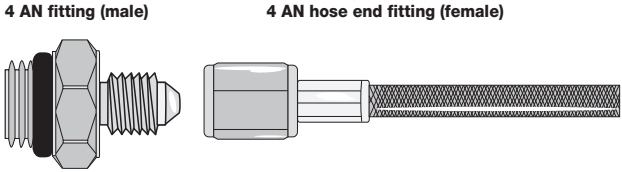

NOTE: None of the above pipe fittings require sealant on the threads.

Venom Injector Installation

The Venom injector can be fitted to a rubber, plastic or metal intake hose after the intercooler and before the intake manifold. For best results it should protudes as far in to the center of the hose as possible.
When fitting to a rubber inlet hose, a small hole should be punched in a suitable location and the Venom injector secured by the retainer fitted to the inside (Fig. 5).
When fitting to a plastic hose or a metal section of the induction systems, a 5mm hole should be drilled in a suitable location and tapped to 6mm for the Venom injector to screw in to.

Venom Injector Fitting Diagram

Fig. 5

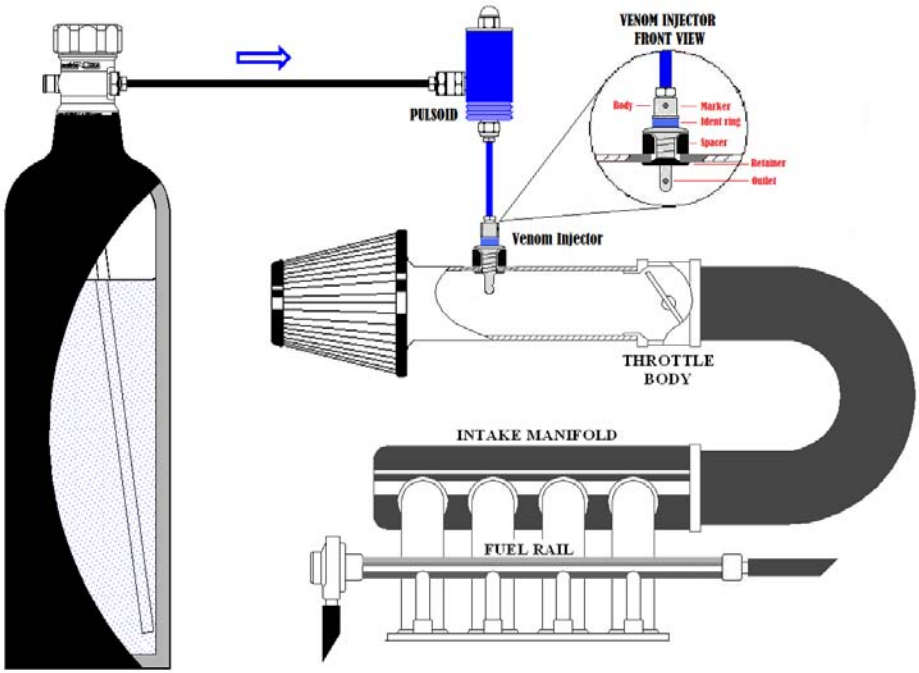

⚠ WARNING

Disregarding these instructions could result in poor performance and/or engine damage.

Metering jet size verification

Before connecting the outlet pipe to the Pulsoid, it is **essential** to check that the metering jet is fitted to jet holder / outlet adapter and that is the right size to suit your application. The jet holder / outlet adaptor is located at the opposite end to the mounting stud (see Fig. 6) and can be unscrewed by using a 13mm wrench.

Once removed the head of the metering jet should be visible, protruding slightly from the end of the male thread and it should be possible to see a size/number on the side. If you can't see a number you'll need to remove the jet for closer inspection, possibly with the aid of a magnifying glass.
To remove the jet put the jet holder in a 13mm ring spanner or 'clean' socket and unscrew the jet using a suitable flat blade screwdriver.

Check the jet size against the parts list supplied with the system or the jet specification chart on our web site.
Assuming you have the correct jet, screw it back in to the jet holder using your fingers and then 'lightly' nip it up with the screwdriver to make a seal, then reassemble in the reverse order of the above instructions.

CAUTION; The metering jets are made from brass and are easily damaged beyond use if a badly fitting screwdriver or excessive force is used on them.

Fig. 6

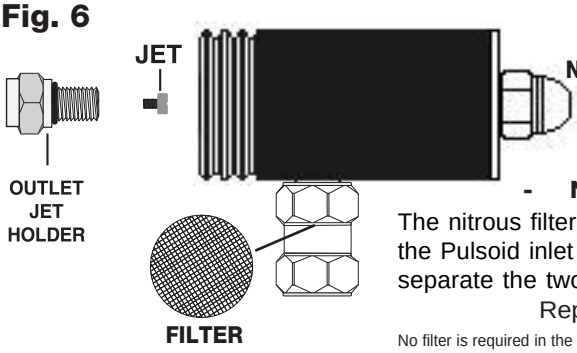

IMPORTANT:
Never remove the Pulsoid mounting stud or use loctite on the nut.

- N O T E -

The nitrous filter is a white element located inside the Pulsoid inlet unit. Use two 17mm wrenches to separate the two sections to access the element. Replace for optimal flow.

No filter is required in the fuel Pulsoid as the OEM filter is more than adequate.

Jet Numbers, Size & Power Rating

1) The 'theoretical' power rating is half the nitrous jet number (e.g. 200 = 100bhp).
2) Extra fuel needs to be added using a method that best suits your application.

Throttle Switch Installation

The micro switch should be mounted to the throttle body or foot pedal, etc. using the the mounting bracket supplied, in such a way that it will be activated at full throttle ONLY

Once fitted it is **essential** to check the operation in the following manner;

1. Have the **driver** sit in the drivers seat as **normal**.

2. Have the **driver** slowly press down **fully** on the throttle pedal, whilst an assistant watches the movement of the throttle mechanism in the engine bay.

3. Check that the throttle mechanism **fully** operates the micro switch at full throttle.

IMPORTANT: Never rely on setting up the switch by hand operating the throttle mechanism, as this may not duplicate actual pedal movement.

Fig. 7

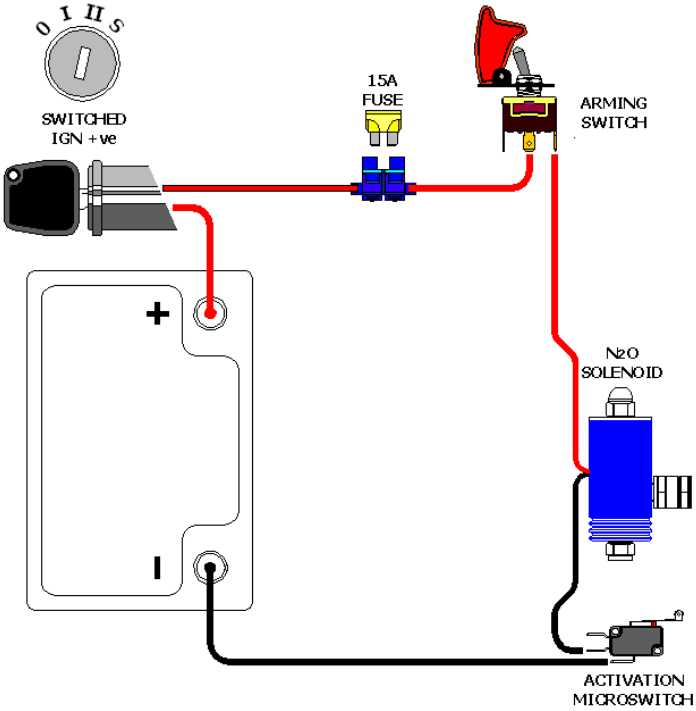

⚠ WARNING

When WON switches are not used, alternative replacements rated at a minimum of 15 Amps should be used, unless a suitable relay of at least 15 Amps is added.

Test Procedure

1. Disconnect the outlet pipe from the injector and aim the N2O to atmosphere. Hold the pipe securely and activate the system briefly, monitoring the results at the open pipe ends. N2O liquid should be seen flowing from the pipe as the system is activated, and should stop flowing when the system is switched off.
2. Connect the nylon pipe back as they were in the injector.
3. Start the engine and run up to normal temperature, hold the revs at approx. 1/3 of max. rpm (e.g. max. rpm limit 6,000 test rpm 2,000) and briefly activate the system whilst monitoring the engines response, and the exhaust gases.
4. Engine rpm should rise (as if you had operated the throttle) and then fall back to normal as you release the switch, whilst the exhaust should become less black than normal smoke which indicates a leaner mixture. If the engine sounds in any way different to the way it sounds when you rev. up the engine normally, cease testing and report to our technicians.
5. If all goes as it should, then you can take the vehicle on the road and carry out the next test. Accelerate hard from say 30 mph up to 70 mph. You should feel a stronger acceleration and less black smoke. If you hear any noises other than a louder exhaust note, or you feel anything other than a smooth surge of power, cease the test and contact our tech team.

Headquarters:
Highpower Systems International Ltd.
Rands Lane, Armthorpe Doncaster
South Yorkshire, England
DN3 3DZ, U.K.
44 (0) 01302 834343
www.noswizard.com